BIRCOparksafe ®
concrete – asphalt: cl. A 15 – C 250

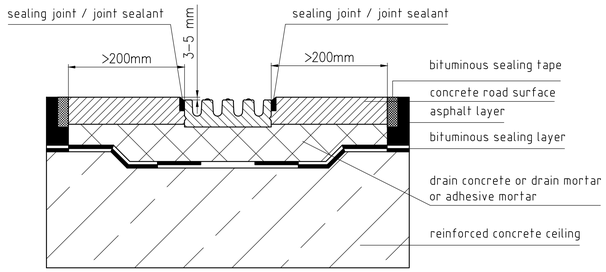

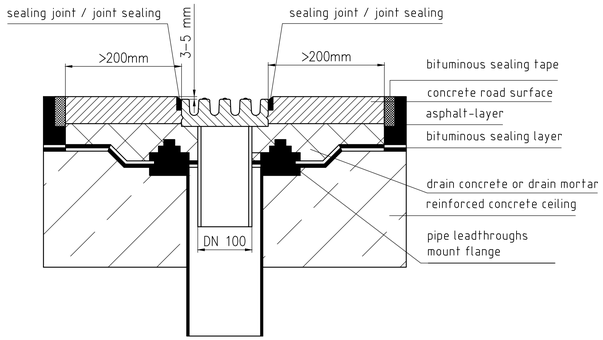

BIRCOparksafe ®
concrete – melted asphalt: cl. A 15 –C 250

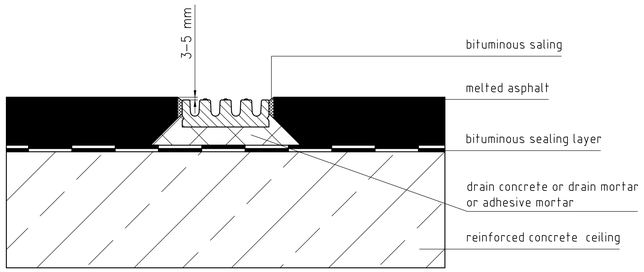

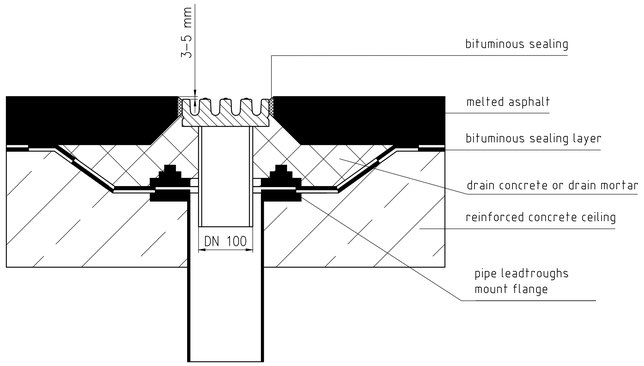

BIRCOparksafe ®
concrete: cl. A 15 – C 250

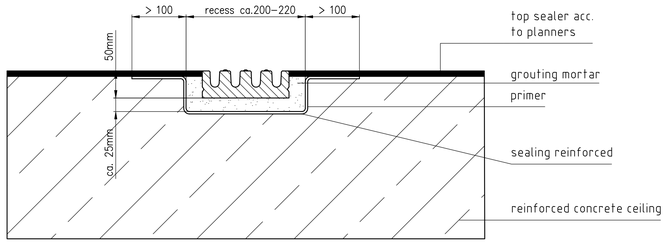

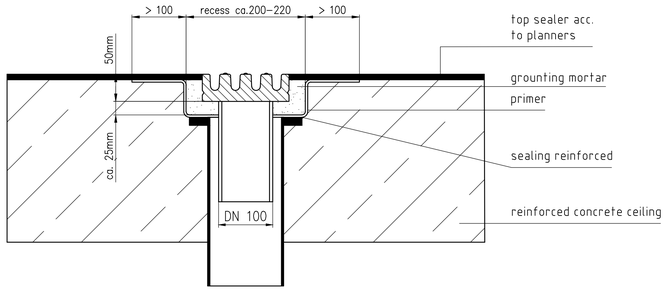

When paverment surfaces are being laid and pressed, it must be ensured that the paverment material is not forced against the channel

Jointing Information

The jointing between the male–female interlocks (groove–tongue) of the channel, as well as the filling of their safety joints, wil be carried out with SF–connect sealent or equivalent after the installation of the channels.

Areas of application: Adhesion of concrete, clinker, steel, stainless steel, aluminium, polyester (GFK), PVC, acrylic, polystyrene, glass, wood.

Properties:
Coated bases must be inspected in advance for adhesion and compatibility. The hardening period depends on the temperature and moisture. Higher temperatures reduce the drying period time. SF–Connect does not contain solvents, isocyanate or silicones and does not require special warning labelling. Prior to beginning the work, it is necessary to make oneself familiar with the handling and safety instructions by reading the material safety data sheet.

Working Instructions:

1. Use the industrial grouting pistol (item code 608500) to apply the sealant to the channel joint / safety seam.
2. Prior to applying the sealant to the safety joint, clean the channel end / safety seam and remove separating agents, dust, soiling, oil and other residues that could inhibit adhesion.
3. Wear protective gloves and eyewear when conducting the work.
4. Insert tubular bag (600 ml) into the industrial grouting gun.
5. Inject SF–Connect into joint.
6. Then smooth out the channel joint / safety seam surface with a jointer or putty knife that has been dipped in a soap solution.
7. Allow material residue to dry. Dried residue can be disposed of as residual waste.

Copyright nach ISO 16016 / Copyright in acc. to ISO 16016 / Copyright selon ISO 16016

BIRCO GmbH
Herrenpfädel 142
76532 Baden–Baden

	Datum Date	Name Nom	Titel / titel / title :
gez. des.	10.11.2025	mma	Installation instructions BIRCOparksafe ® Class A 15 – C 250
Maßstab / Scale / Echelle: 1:4			
CAD A 1,0			
Zeichn. Nr. N° plan	L:\00_AWT\01_ACAD\AWT\Einbau\EN1433\parksafe\25843a_EN		